Features

- System Solution for Immobilizer and Passive Entry / Passive Start (PEPS) Functionality
- Optional integrated Open Source Immobilizer Software Stack Supports Automotive Immobilizer Applications (CMMI certified)
- Integrated Ultra-low Power Flash AVR (8-bit) Microcontroller
- 2112-byte EEPROM
- 32-bit Unique Device Identification Number
- Available in Small 5x7 QFN 38-Pin Package

Contactless Transponder

- LF Contactless Transponder Operation in Passive and Active Modes
- Integrated Codecs for Enhanced LF Communication Range
- Ultra Low-power AES-128 Cryptographic Engine for Using Immobilizer and PEPS Applications
- Access Protected Area for two 128-bit Secret Keys for Device Authentication
- Optional One 128-bit Transport Key for Initial Configuration
- LF Receive Data Integrity Check (CRC-4/CRC-8)

3D LF 125kHz LF Receiver

- Wake-up Sensitivity 1.3mVpp for All Receiver Channels
- Supply Current for LF Receiver Active (4µA/Listen Mode)
- Logarithmic 8-bit digital RSSI for Simultaneous Field Strength Measurement of All Three Receiver Channels
- Two Different Identification (ID) Registers
- Programmable Data Frame Length of the ID

Ultra-low-power AVR Microcontroller

- 16Kbyte Flash Program Memory (Including 2KB of Immobilizer Software Stack)
- 2112-byte EEPROM - Including Protected User Data and Device Configuration Data (64Bytes)
- Error Correction Code (ECC) Engine Protects Flash and EEPROM
- 512Bytes of SRAM
- Four GP Timers
  - T0: Flexible WD and Interval Timers
  - T1: 15-bit Interval Timer
  - T2: Asynchronous 8-bit Timer/Counter with Output Compare
  - T3: Asynchronous 8-bit Timer/Counter with Output Compare and Input Capture
- Power Management Unit
- System Clock Management and Monitoring Functions
- POR and Brown-out Detection
- Programmable Voltage Monitor
- RTC and Two Internal System Clock RC Oscillators with f_1 = 125kHz, f_2 = 4MHz
- SPI, TM/SSI, IR Digital Interfaces; dW 1-wire Debug IF with AVR Device Tools
- Very Low Power Consumption:
  - Active: 50µA (Sys_Clk at 125kHz)
  - Idle: < 70µA (Sys_Clk at 1MHz)
  - Power-Down: 0.8µA
  - EE(wr): 40µA
- Wide Battery Voltage Range from1.9V to 4.2V (In Contact Mode)
- –40°C to +85°C Operating Temperature
- Automotive Grade C Compiler

Embedded AVR Microcontroller Including Complete LF Functionality for Passive Entry / Passive Start Keys

Atmel ATA5790

Summary

NOTE: This is a summary document. The complete document is available under NDA. For more information, please contact your local Atmel sales office.

9197CS–RKE–07/11

1. Description

Atmel® ATA5790 is a smart Passive Entry/Passive Start (PEPS) device that includes an embedded ultra-low-power AVR® 8-bit microcontroller, a three-dimensional LF receiver module and an LF immobilizer interface in a single QFN38 package.

Furthermore, the device has an integrated AES-128 cryptography hardware engine, which is accessible via both the immobilizer and the PEPS unit. The immobilizer interface can run in contactless mode, allowing energy supply and data transmission via the LF link.

The Atmel ATA5790 is designed for automotive applications that require both immobilization and Passive Entry/Passive Start functions in one single key. It conforms to requirements of extremely low power consumption and provides all the necessary circuitry for the entire application.

1.1 System Block Diagram

Figure 1-1. System Block Diagram

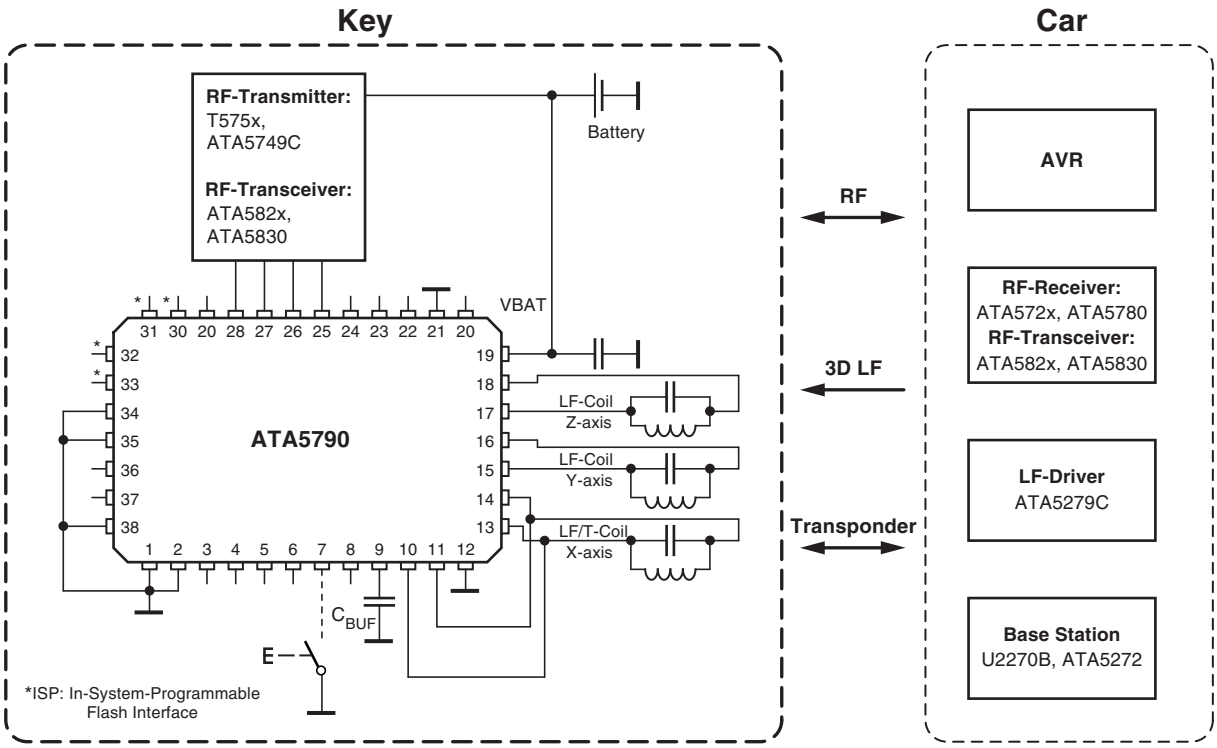

1.2 Atmel ATA5790 Block Diagram

Figure 1-2. Atmel® ATA5790 Block Diagram

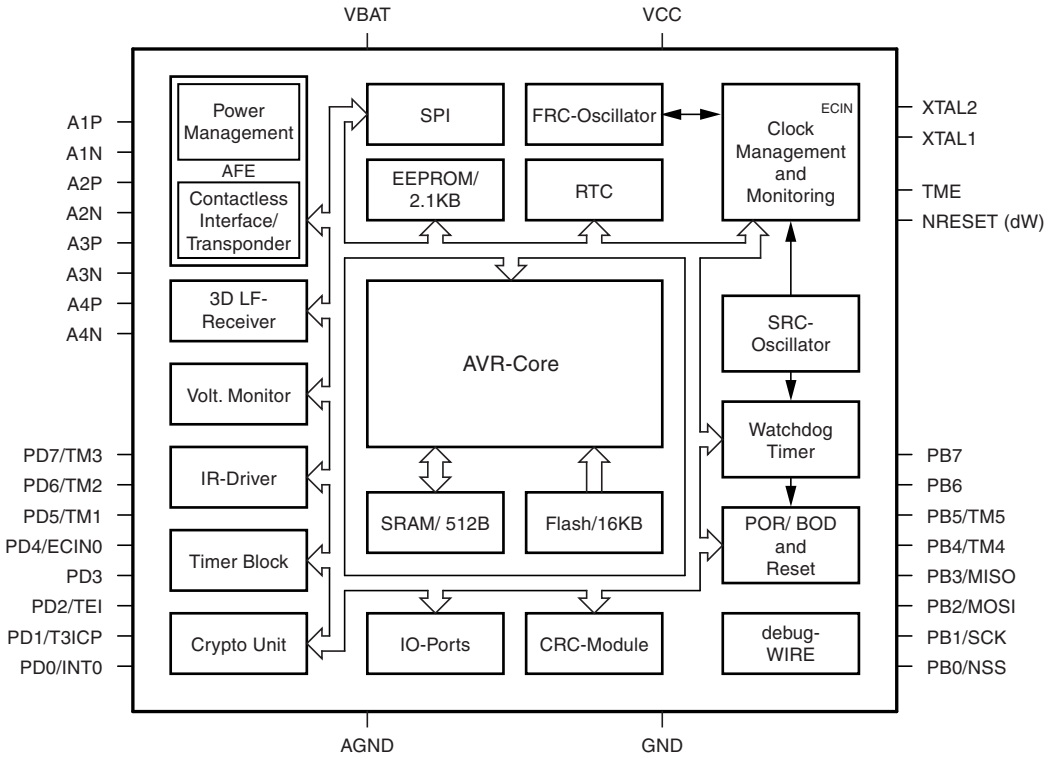

1.3 Pin Configurations

Figure 1-3. Pinout for QFN38 Package

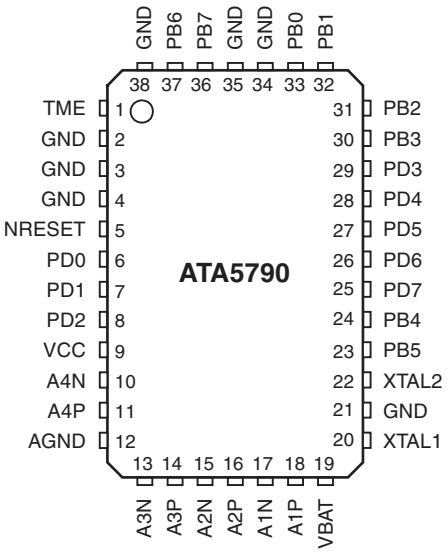

Table 1-1. Pin Description

Pin Number	Pin Name	Alternate Function 1	Alternate Function 2	Function	Comment
1	TME	-	-	Test mode enable	
2	GND	-	-	Power supply ground	
3	GND	-	-	Power supply ground	
4	GND	-	-	Power supply ground	
5	NRESET	dW	-	Reset input / debugWire interface	
6	PD0	INT0	PCINT8	I/O-port / External interrupt input 0	Port D0
7	PD1	T3ICP	PCINT9	I/O-port / Timer3 external capture input	Port D1
8	PD2	TEI	PCINT10	I/O-port / External Timer input clock	Port D2
9	VCC	-	-	Power supply voltage for the microcontroller. At this pin a capacitor must be connected capacitance CBUF to buffer the voltage during field supply and to block the VCC of the microcontroller	
10	A4N	-	-	Input pin for AFE of the transponder	
11	A4P	-	-	Input pin for AFE of the transponder	
12	AGND	-	-	Analog power supply ground	
13	A3N	-	-	Analog positive input coil pin 3 for channel 3	
14	A3P	-	-	Analog negative input coil pin 3 for channel 3	
15	A2N	-	-	Analog negative input coil pin 2 for channel 2	
16	A2P	-	-	Analog positive input coil pin 2 for channel 2	
17	A1N	-	-	Analog negative input coil pin 1 for channel 1	
18	A1P	-	-	Analog positive input coil pin 1 for channel 1	
19	VBAT	-	-	Power supply voltage for battery	
20	XTAL1	-	-	32kHz crystal oscillator input pin	
21	GND	-	-	Power supply ground	
22	XTAL2	-	-	32kHz crystal oscillator output pin	
23	PB5	TM5	PCINT5	I/O-port / timer modulator pin 5	Port B5
24	PB4	TM4	PCINT4	I/O-port / timer modulator pin 4	Port B4
25	PD7	TM3	PCINT15	I/O-port / timer modulator pin 3	Port D7
26	PD6	TM2	PCINT14	I/O-port / timer modulator pin 2	Port D6
27	PD5	TM1	PCINT13	I/O-port / timer modulator pin 1	Port D5
28	PD4	ECIN0	PCINT12	I/O-port / external clock input 0	Port D4
29	PD3	-	PCINT11	I/O-port	Port D3
30	PB3	MISO	PCINT3	I/O-port / SPI	Port B3
31	PB2	MOSI	PCINT2	I/O-port / SPI	Port B2
32	PB1	SCK	PCINT1	I/O-port / SPI	Port B1
33	PB0	NSS	PCINT0	I/O-port / SPI	Port B0
34	GND	-	-	Power supply ground	
35	GND	-	-	Power supply ground	
36	PB7	-	PCINT7	I/O-port	Port B7
37	PB6	-	PCINT6	I/O-port	Port B6
38	GND	-	-	Power supply ground	

2. Ordering Information

Extended Type Number	Package	Remarks
ATA5790-P3QW	QFN38 - 5x7	Pb-free

3. Package Information

Figure 3-1. QFN38 - 5x7 Package

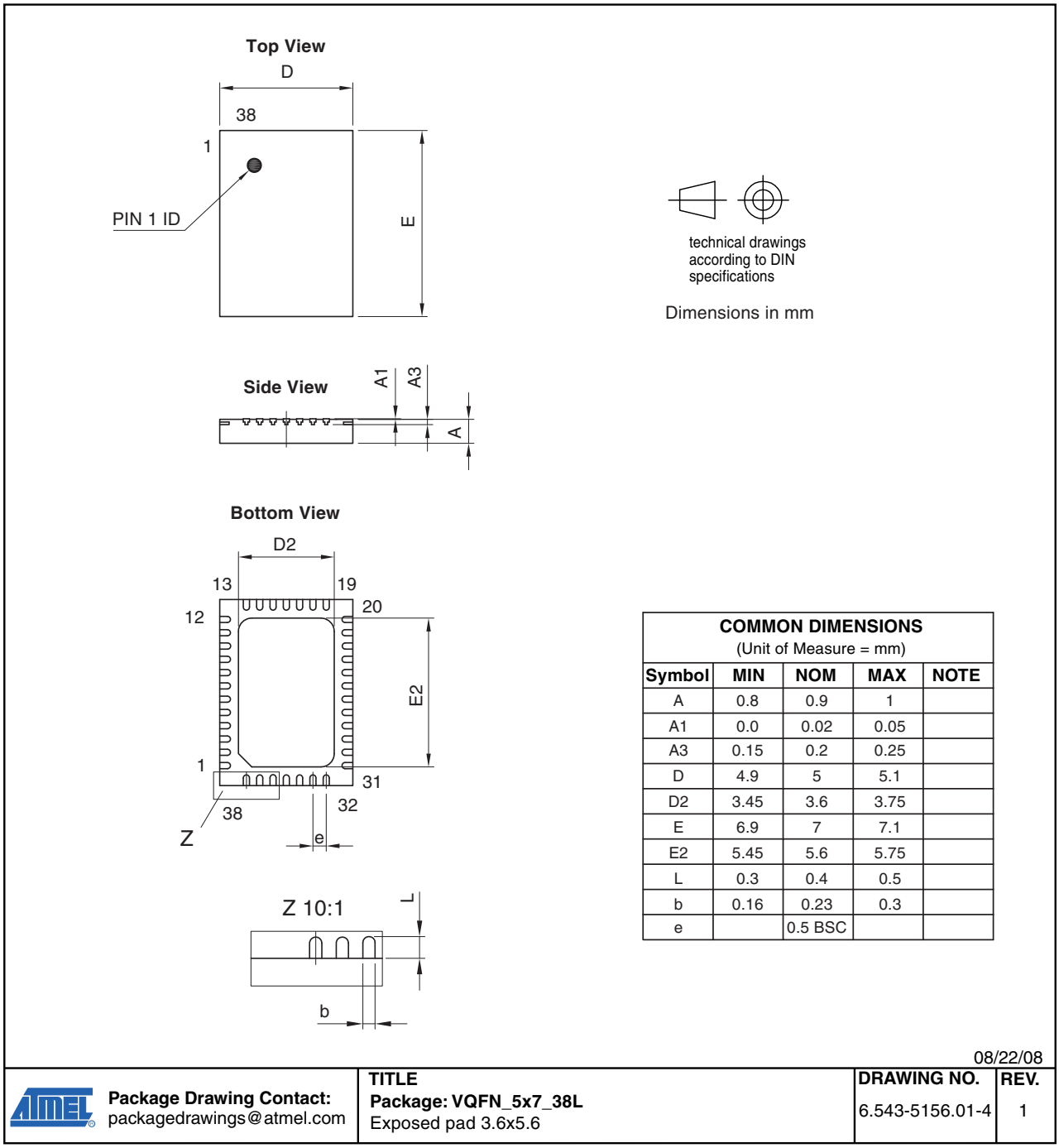

COMMON DIMENSIONS (Unit of Measure = mm)				
Symbol	**MIN**	**NOM**	**MAX**	**NOTE**
A	0.8	0.9	1	
A1	0.0	0.02	0.05	
A3	0.15	0.2	0.25	
D	4.9	5	5.1	
D2	3.45	3.6	3.75	
E	6.9	7	7.1	
E2	5.45	5.6	5.75	
L	0.3	0.4	0.5	
b	0.16	0.23	0.3	
e		0.5 BSC		

08/22/08

Package Drawing Contact: packagedrawings@atmel.com	TITLE	DRAWING NO.	REV.
	Package: VQFN_5x7_38L Exposed pad 3.6x5.6	6.543-5156.01-4	1

4. Revision History

Please note that the following page numbers referred to in this section refer to the specific revision mentioned, not to this document.

Revision No.	History
9197CS-RKE-07/11	• Set datasheet from Preliminary to Standard
9197BS-RKE-05/11	• Features on page 1 updated • Section 1 “Description” on page 2 updated

Atmel Corporation
2325 Orchard Parkway
San Jose, CA 95131
USA
Tel: (+1)(408) 441-0311
Fax: (+1)(408) 487-2600

Atmel Asia Limited
Unit 01-5 & 16, 19/F
BEA Tower, Millennium City 5
418 Kwun Tong Road
Kwun Tong, Kowloon
HONG KONG
Tel: (+852) 2245-6100
Fax: (+852) 2722-1369

Atmel Munich GmbH
Business Campus
Parkring 4
D-85748 Garching b. Munich
GERMANY
Tel: (+49) 89-31970-0
Fax: (+49) 89-3194621

Atmel Japan
9F, Tonetsu Shinkawa Bldg.
1-24-8 Shinkawa
Chuo-ku, Tokyo 104-0033
JAPAN
Tel: (+81) (3) 3523-3551
Fax: (+81) (3) 3523-7581

© 2011 Atmel Corporation. All rights reserved. / Rev.: 9197CS–RKE–07/11

Atmel®, Atmel logo and combinations thereof, AVR® and others are registered trademarks or trademarks of Atmel Corporation or its subsidiaries. Other terms and product names may be trademarks of others.

Disclaimer: The information in this document is provided in connection with Atmel products. No license, express or implied, by estoppel or otherwise, to any intellectual property right is granted by this document or in connection with the sale of Atmel products. EXCEPT AS SET FORTH IN THE ATMEL TERMS AND CONDITIONS OF SALES LOCATED ON THE ATMEL WEBSITE, ATMEL ASSUMES NO LIABILITY WHATSOEVER AND DISCLAIMS ANY EXPRESS, IMPLIED OR STATUTORY WARRANTY RELATING TO ITS PRODUCTS INCLUDING, BUT NOT LIMITED TO, THE IMPLIED WARRANTY OF MERCHANTABILITY, FITNESS FOR A PARTICULAR PURPOSE, OR NON-INFRINGEMENT. IN NO EVENT SHALL ATMEL BE LIABLE FOR ANY DIRECT, INDIRECT, CONSEQUENTIAL, PUNITIVE, SPECIAL OR INCIDENTAL DAMAGES (INCLUDING, WITHOUT LIMITATION, DAMAGES FOR LOSS AND PROFITS, BUSINESS INTERRUPTION, OR LOSS OF INFORMATION) ARISING OUT OF THE USE OR INABILITY TO USE THIS DOCUMENT, EVEN IF ATMEL HAS BEEN ADVISED OF THE POSSIBILITY OF SUCH DAMAGES. Atmel makes no representations or warranties with respect to the accuracy or completeness of the contents of this document and reserves the right to make changes to specifications and products descriptions at any time without notice. Atmel does not make any commitment to update the information contained herein. Unless specifically provided otherwise, Atmel products are not suitable for, and shall not be used in, automotive applications. Atmel products are not intended, authorized, or warranted for use as components in applications intended to support or sustain life.